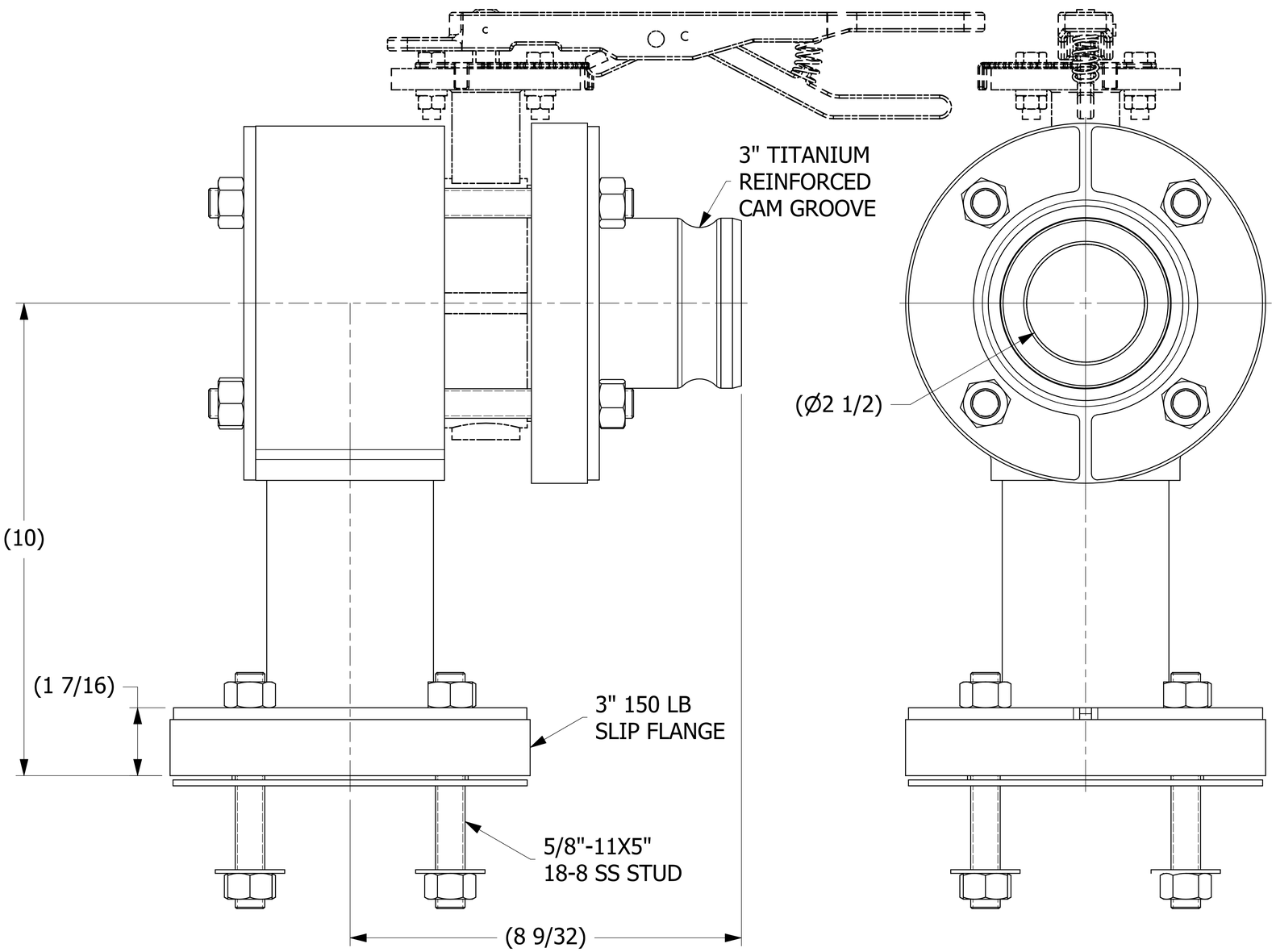

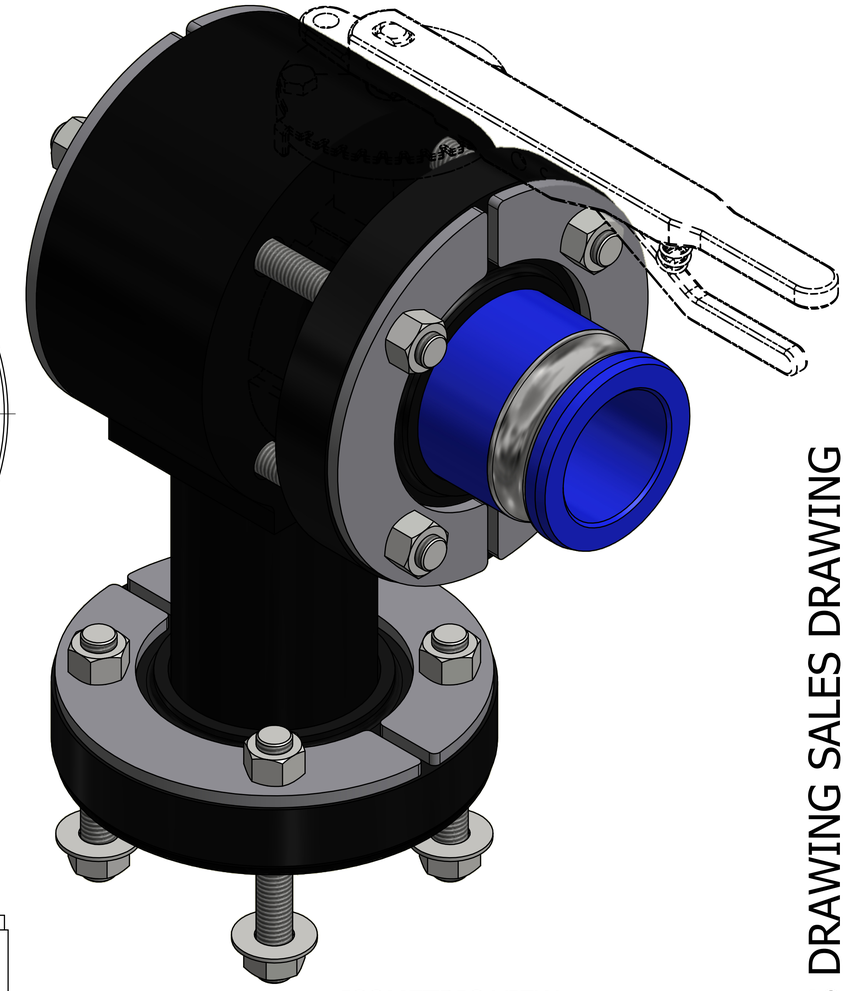

ISOMETRIC VIEW

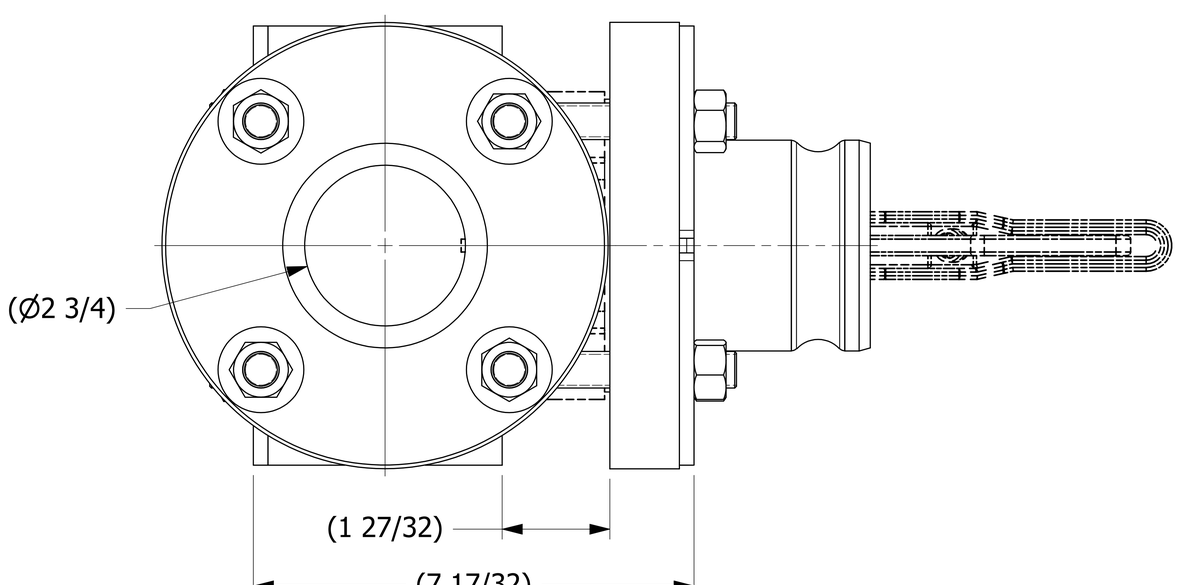

NOTES:
1. GASKET MATERIAL IS BLACK VITON B.
2. APPROXIMATE WEIGHT IS 21 LB.

REV	BY	DATE	DESCRIPTION
A	RJP	4-28-16	RELEASED FOR PRODUCTION

UNLESS OTHERWISE SPECIFIED DIMENSIONAL TOLERANCES
FRACTIONAL: ±1/16
X.XX: ±.03
X.XXX: ±.015
ANGULAR: ±1°
DEBURR ALL SHARP EDGES. ALL MACHINED SURFACES TO HAVE A 125 RMS FINISH UNLESS NOTED OTHERWISE.
THIRD ANGLE PROJECTION

DRAWN BY:	RJP
CHECKED BY:	JRO
PROTOTYPE BY:	RJP
PROTOTYPE DATE:	4/21/2016
APPROVED FOR PRODUCTION BY:	JRO
PRODUCTION DATE:	4/28/2016

SALCO PRODUCTS, INC.

PART NAME: UNLOADING ADAPTER 3"

MATERIAL: SALCO PE/PE/SS

PROJECT #: H160420F | SHEET #: 1 OF 1 | SCALE: 1:1

DRAWING #: E43568 | PART #: HSCSLSHMULA16

THIS PRINT, PROPERTY OF SALCO PRODUCTS INC, CONTAINS PROPRIETARY INFORMATION AND MUST NOT BE COPIED, REPRODUCED, OR USED DETRIMENTALLY TO OUR INTEREST.

SALES DRAWING SALES DRAWING
SALES DRAWING SALES DRAWING